Code: 31003VV

technical specifications

VIVA

Mono Basin Mixer Side Handle

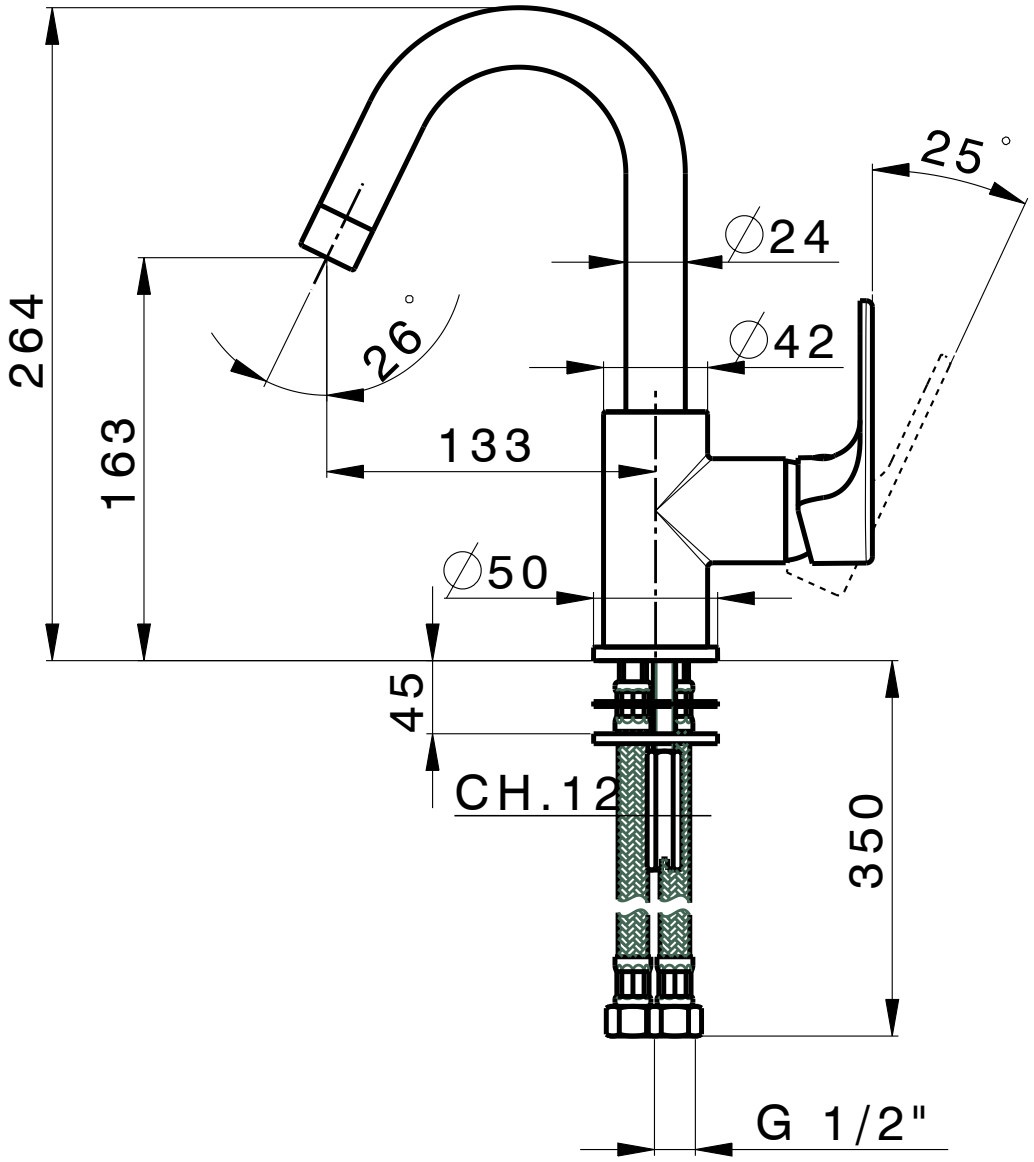

CIFIAL

www.cifial.co.uk
cifialuk@btconnect.com

dimensions mm

Code: 31003VV

technical specifications

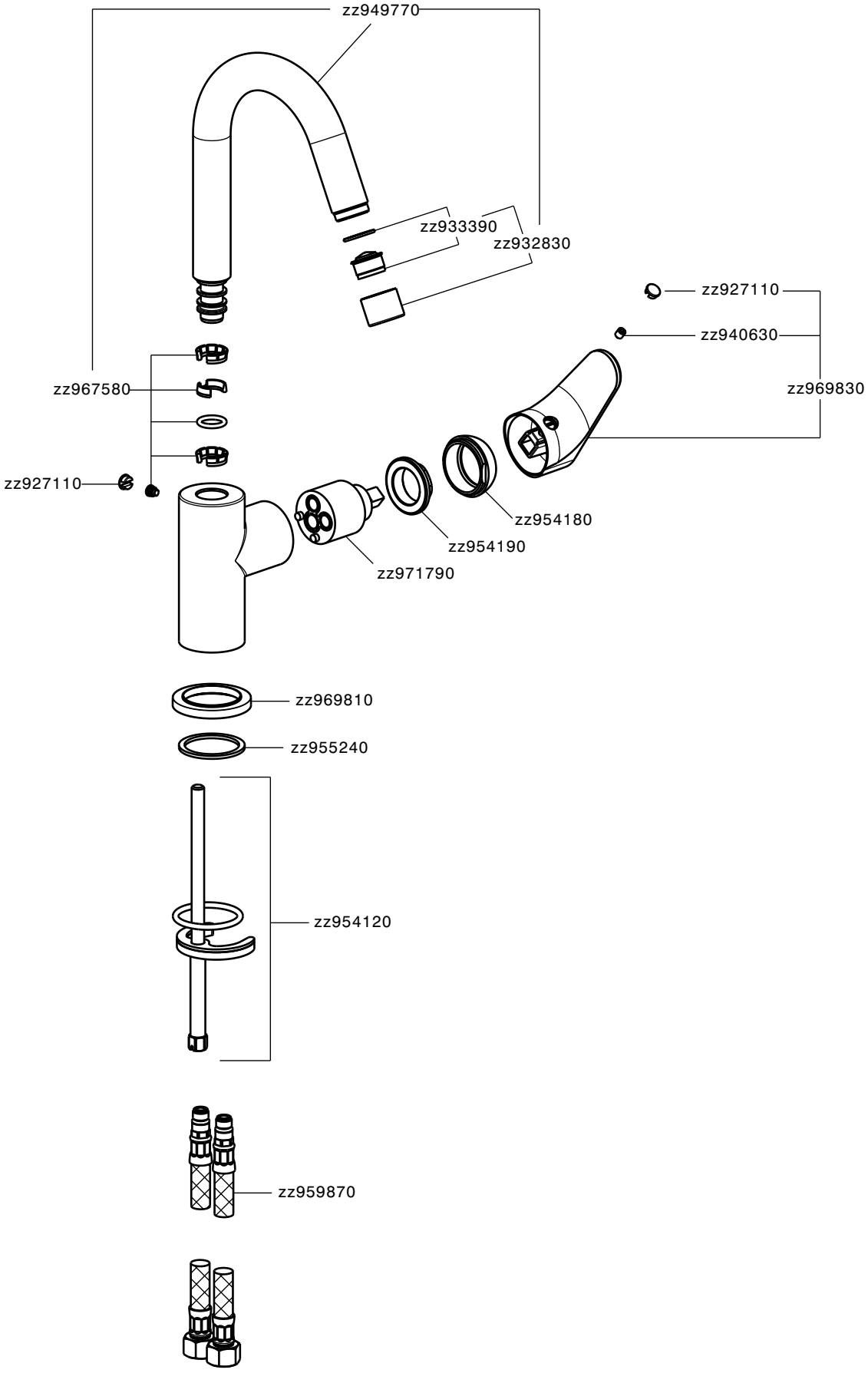

CIFIAL

www.cifial.co.uk
cifialuk@btconnect.com

dimensions mm